TEST REPORT

ON

0.5 GHz to 18.0 GHz

MINIATURE

ABSORPTIVE

SPDT PIN DIODE SWITCH

AMC MODEL No:

MSNN-2DT-162W-04T

Serial Numbers: 2MS008230 through 2MS008235

DESIGNED
BY
A. K. Gorwara & R. Atable

TESTED
BY
K. Sheridan

REPORTED
BY
W. Steinhaus

March 11, 2004

AMERICAN MICROWAVE CORPORATION., 7311-G Grove Road, Frederick, MD 21704
Tel: 301-662-4700 • Fax: 301-662-4938 • Email: sales@americanmicrowavecorp.com
Website: http://www.americanmicrowavecorp.com

ISO9001 : 1994 CERTIFIED

TABLE OF CONTENTS

- PRODUCT DESCRIPTION AND ELECTRICAL SPECIFICATIONS — PAGE 3
- MECHANICAL OUTLINES FOR MSNN-2DR/DT-162W-04T-STANDARD AND MSNN-2DR/DT-162W-04T-IND-SP — PAGE 4
- OUTLINE DRAWING FOR MSNN-2DR/DT-162W-04T-STANDARD — PAGE 5
- OUTLINE DRAWING FOR MSNN-2DR/DT-162W-04-IND-SP — PAGE 6
- FINAL TEST DATA FOR SERIAL NUMBERS 2MS008230 THRU 2MS008235 — PAGE 7
- TEST DATA ON MSNN-2DT-162W-04T S/N: 2MS008230 — PAGE 8
- TEST DATA ON MSNN-2DT-162W-04T S/N: 2MS008231 — PAGE 9
- TEST DATA ON MSNN-2DT-162W-04T S/N: 2MS008232 — PAGE 10
- TEST DATA ON MSNN-2DT-162W-04T S/N: 2MS008233 — PAGE 11
- TEST DATA ON MSNN-2DT-162W-04T S/N: 2MS008234 — PAGE 12
- TEST DATA ON MSNN-2DT-162W-04T S/N: 2MS008235 — PAGE 13

SPDT, ABSORPTIVE, MINIATURE PIN DIODE SWITCH
AMC MODEL No: MSNN-2DT-162W-04T

FEATURES:

- **MINIATURE**
- **BROADBAND**
- **ABSORPTIVE**

SPECIFICATIONS:

FREQUENCY	:	0.5 GHz to 18.0 GHz
INSERTION LOSS	:	REFLECTIVE: 2.5 dB ABSORPTIVE: 3.5 dB
ISOLATION	:	0.5 GHz to 2 GHz: 60 dB 2 GHz to 18 GHz: 70 dB
SPEED	:	RISE: 10 nS TYPICAL, 15 nS MAXIMUM FALL: 10 nS TYPICAL, 15 nS MAXIMUM DELAY ON: 75 nS TYPICAL, 100 nS MAXIMUM DELAY OFF: 75 nS TYPICAL, 100 nS MAXIMUM
POWER INPUT	:	(CW) +20 dBm (STANDARD), +10 dBm (HIGH SPEED)
SURVIVAL POWER	:	1 WATT CW, 10 WATTS PEAK 1 USEC
CONTROL	:	TTL LOGIC “0” = ON, “1” = OFF
POWER SUPPLY	:	+5V @ 100 mA MAXIMUM -5V @ 75 mA MAXIMUM (REFLECTIVE 100 mA MAXIMUM (ABSORPTIVE)

MECHANICAL OUTLINE

FOR MSNN-2DR/DT-162W-04T-STANDARD

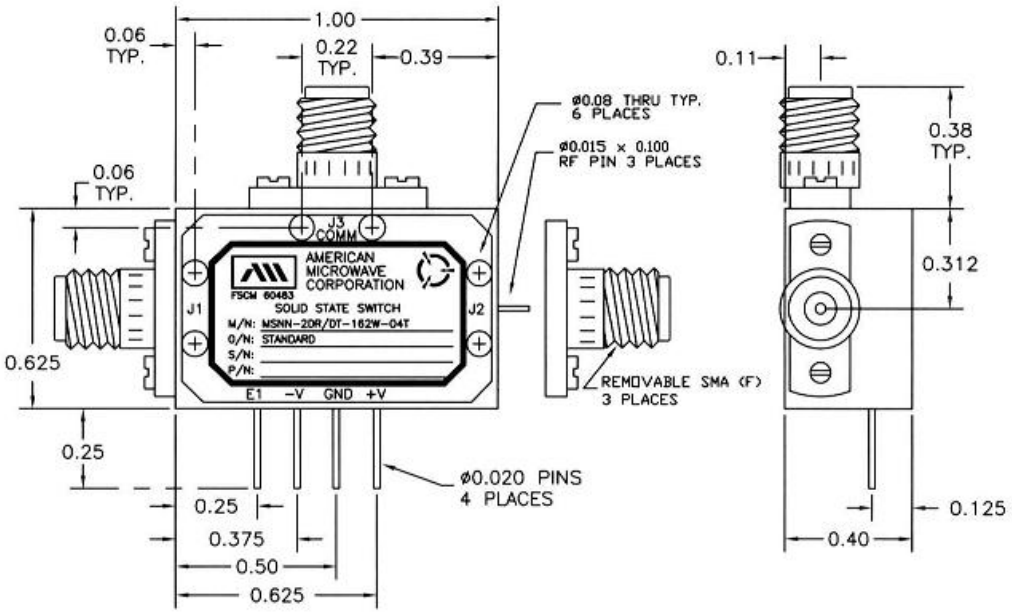

FOR MSNN-2DR/DT-162W-04T-IND-SP

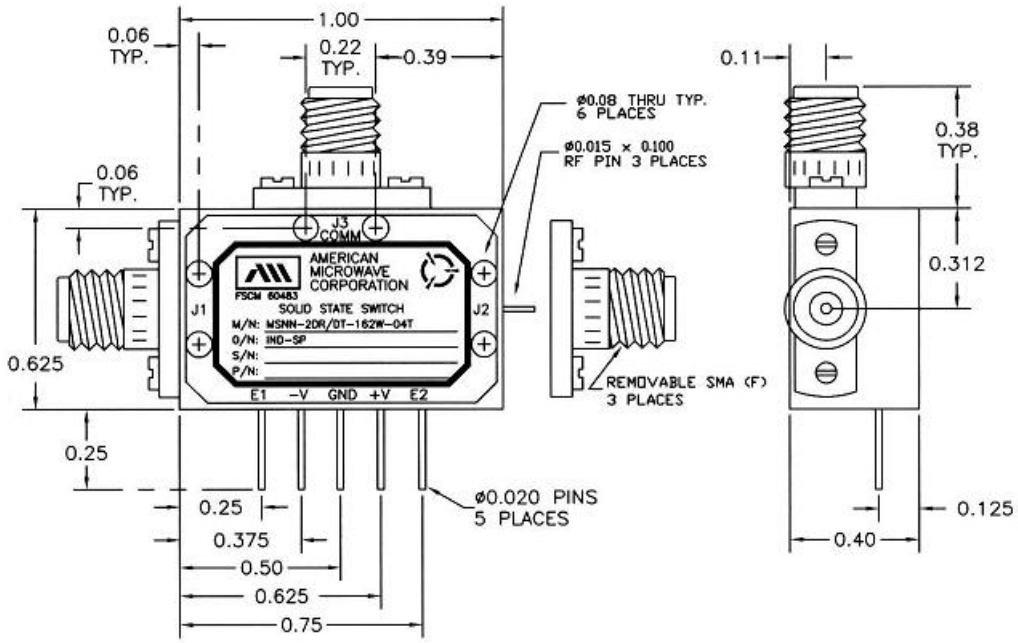

OUTLINE DRAWING

AMC MODEL NO: MSNN-2DR/DT-162W-04T-STANDARD

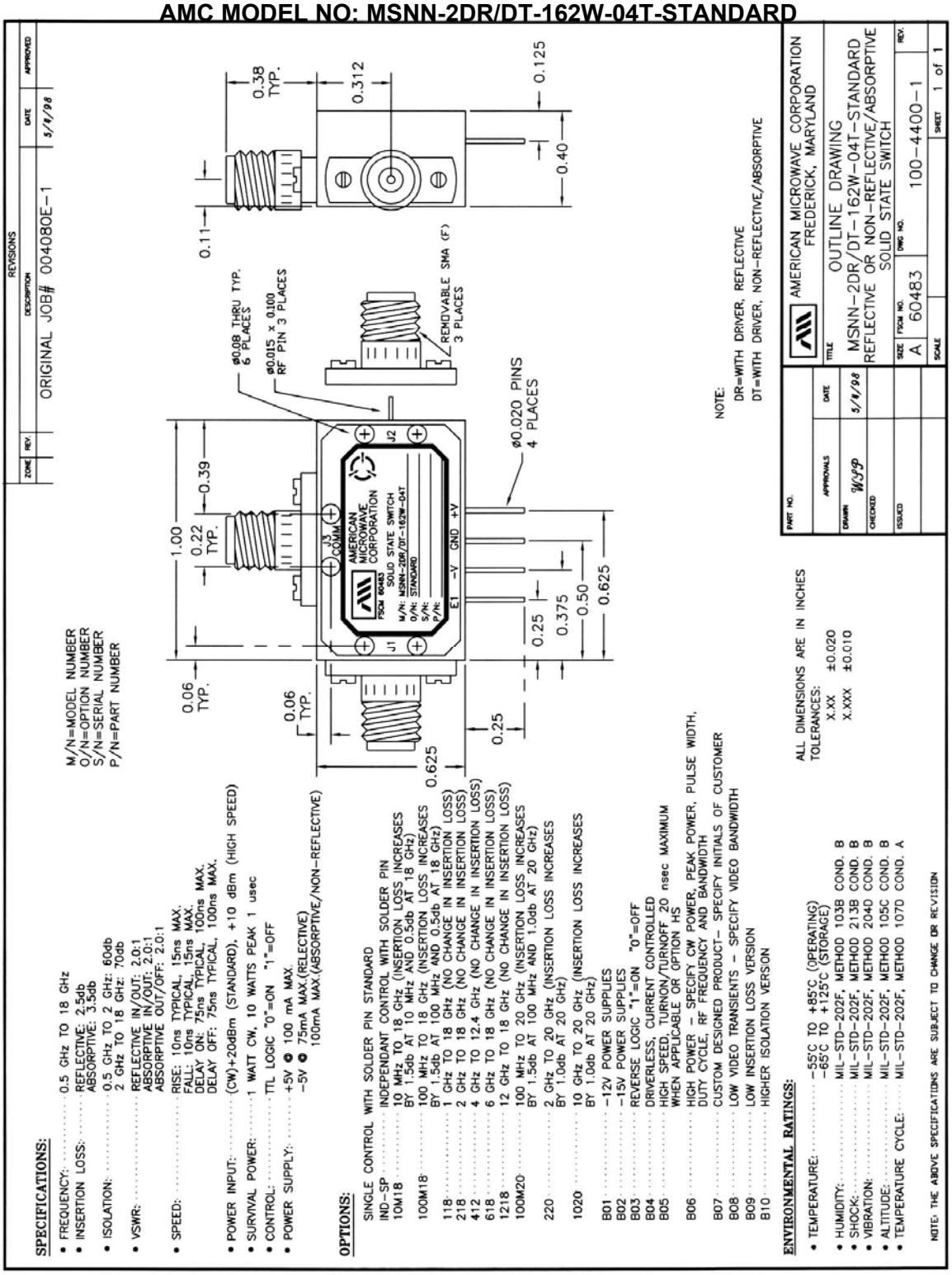

OUTLINE DRAWING

AMC MODEL NO: MSNN-2DR/DT-162W-04T-IND-SP

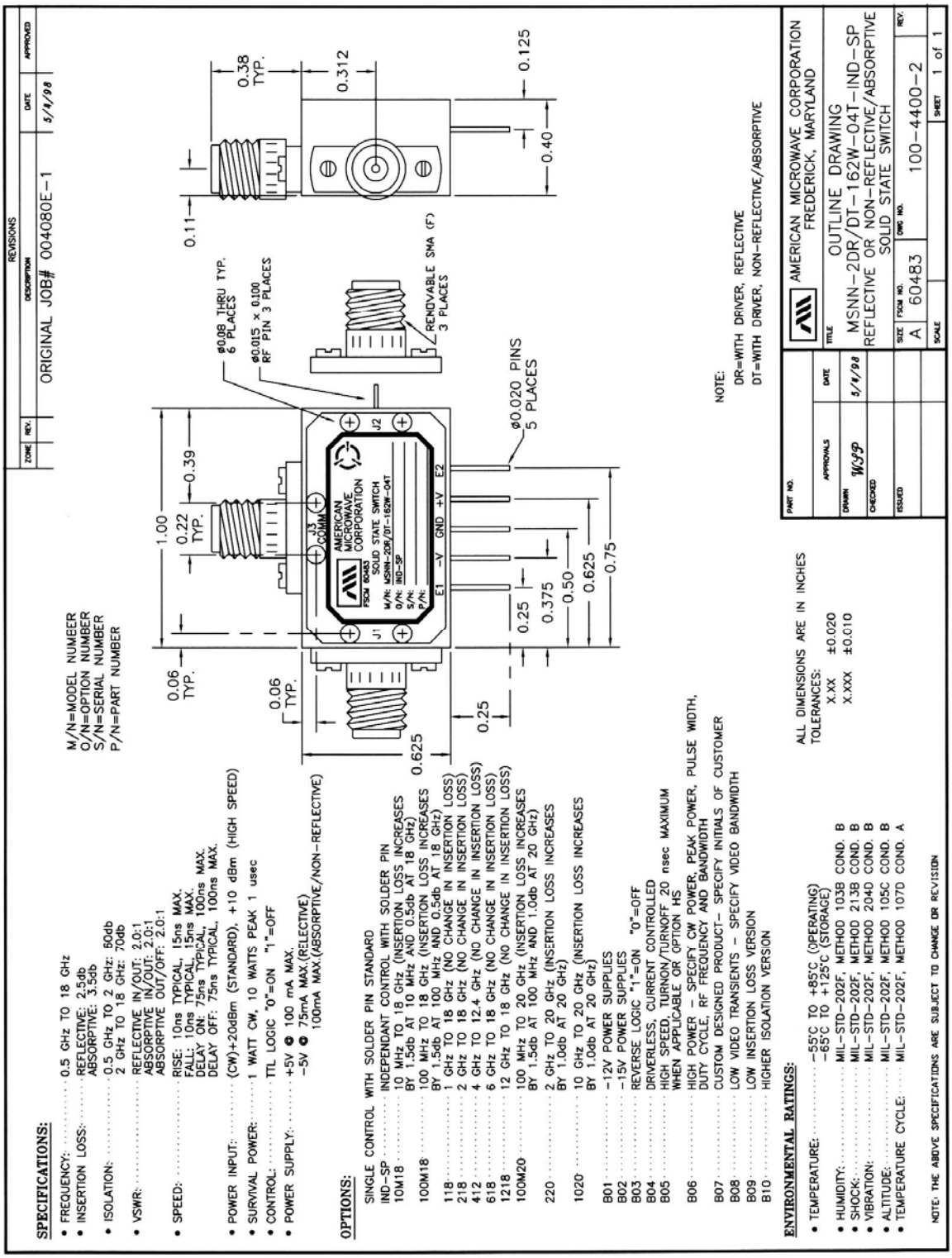

T11-WHS-SW-0304

FINAL TEST DATA

FINAL TEST DATA SHEETS

FOR

AMC MODEL NUMBER

MSNN-2DT-162W-04T

Serial Numbers:

2MS008230 THRU 2MS008235

AMERICAN MICROWAVE CORPORATION, 7311-G Grove Road, Frederick, MD 21704
Tel: 301-662-4700 ● Fax: 301-662-4938 ● Email: sales@americanmicrowavecorp.com
Website: http://www.americanmicrowavecorp.com

FINAL TEST DATA

AMC MODEL NO: MSNN-2DT-162W-04T, SERIAL NUMBER: 2MS008230

AMER MICROWAVE CORPORATION
7311-G E RD., FREDERICK MD. 21704
TEL: 301-662-4700 FAX: 301-662-4938

DATE: 11 SEPT 00

FINAL TEST DATA
ON
MICROWAVE SWITCH

CUSTOMER: RAYTHEON SYSTEMS
JOB NO: 004080E-1
MODEL NO: MSNN-2DT-162W-04T
SERIAL NO: 2MS008230
CURRENT DRAW: + 5VDC @ 120 mA; - 5 VDC @ 70mA

TECHNICIAN: K. SHERIDAN
OPTION NO:
SPECIFICATION:
FREQUENCY RANGE: 0.6 - 18 GHz

INSERTION LOSS (WORST CASE)	RETURN LOSS (WORST CASE)					
	INPUT dB	INPUT VSWR	OUTPUT ON dB	OUTPUT ON VSWR	OUTPUT OFF dB	OUTPUT OFF VSWR
J3-J1 3.2 dB	9.97 dB	1.93 : 1	9.50 dB	2.00 : 1	11.5 dB	1.71 : 1
J3-J2 3.2 dB	9.65 dB	1.98 : 1	10.20 dB	1.89 : 1	11.2 dB	2.75 : 1
	dB	1. : 1	dB	1. : 1	dB	1. : 1
	dB	1. : 1	dB	1. : 1	dB	1. : 1
	dB	1. : 1	dB	1. : 1	dB	1. : 1
	dB	1. : 1	dB	1. : 1	dB	1. : 1
	dB	1. : 1	dB	1. : 1	dB	1. : 1
	dB	1. : 1	dB	1. : 1	dB	1. : 1
	dB	1. : 1	dB	1. : 1	dB	1. : 1

ISOLATION	SWITCHING SPEED			
	DELAY ON	RISE TIME	DELAY OFF	FALL TIME
J3-J1 >50 dB	≤ 250 nS	nS	≤ 250 nS	nS
J3-J2 >50 dB	≤ 250 nS	nS	≤ 250 nS	nS
	nS	nS	nS	nS
	nS	nS	nS	nS
	nS	nS	nS	nS
	nS	nS	nS	nS
	nS	nS	nS	nS
	nS	nS	nS	nS
	nS	nS	nS	nS

NOTE: Any additional test data on back

TESTED ON: HP8757A/HP8350B

QA/QC APPROVAL: Q4 Donald Harmon DATED: 9/14/00

FINAL TEST DATA

AMC MODEL NO: MSNN-2DT-162W-04T, SERIAL NUMBER: 2MS008231

AMER' MICROWAVE CORPORATION
7311-G E RD., FREDERICK MD. 21704
TEL: 301-662-4700 FAX: 301-662-4938

DATE: 11 SEPT 00

FINAL TEST DATA
ON
MICROWAVE SWITCH

CUSTOMER: RAYTHEON SYSTEMS
TECHNICIAN: K. SHERIDAN
JOB NO: 004080E-1
MODEL NO: MSNN-2DT-162W-04T
OPTION NO:
SERIAL NO: 2MS008231
SPECIFICATION:
CURRENT DRAW: + 5VDC @ 120 mA; - 5 VDC @ 70mA
FREQUENCY RANGE: 0.6 - 18 GHz

INSERTION LOSS (WORST CASE)	RETURN LOSS (WORST CASE)					
	INPUT dB	INPUT VSWR	OUTPUT ON dB	OUTPUT ON VSWR	OUTPUT OFF dB	OUTPUT OFF VSWR
J3-J1 3.3 dB	10.98 dB	1.78 : 1	11.58 dB	1.68 : 1	9.64 dB	1.98 : 1
J3-J2 2.99 dB	10.52 dB	1.84 : 1	10.65 dB	1.83 : 1	13.2 dB	1.55 : 1
	dB	1. : 1	dB	1. : 1	dB	1. : 1
	dB	1. : 1	dB	1. : 1	dB	1. : 1
	dB	1. : 1	dB	1. : 1	dB	1. : 1
	dB	1. : 1	dB	1. : 1	dB	1. : 1
	dB	1. : 1	dB	1. : 1	dB	1. : 1
	dB	1. : 1	dB	1. : 1	dB	1. : 1
	dB	1. : 1	dB	1. : 1	dB	1. : 1

ISOLATION	SWITCHING SPEED			
	DELAY ON	RISE TIME	DELAY OFF	FALL TIME
J3-J1 >50 dB	≤ 250 nS	nS	≤ 250 nS	nS
J3-J2 >50 dB	≤ 250 nS	nS	≤ 250 nS	nS
	nS	nS	nS	nS
	nS	nS	nS	nS
	nS	nS	nS	nS
	nS	nS	nS	nS
	nS	nS	nS	nS
	nS	nS	nS	nS
	nS	nS	nS	nS

NOTE: Any additional test data on back

TESTED ON: HP8757A/HP8350B

QA/QC APPROVAL: Q4 Donald Harmon DATED: 9/14/00

FINAL TEST DATA

AMC MODEL NO: MSNN-2DT-162W-04T, SERIAL NUMBER: 2MS008232

AMERI MICROWAVE CORPORATION
7311-G G E RD., FREDERICK MD. 21704
TEL: 301-662-4700 FAX: 301-662-4938

DATE: 11 SEPT 00

FINAL TEST DATA
ON
MICROWAVE SWITCH

CUSTOMER: RAYTHEON SYSTEMS
JOB NO: 004080E-1
MODEL NO: MSNN-2DT-162W-04T
SERIAL NO: 2MS008232
CURRENT DRAW: + 5VDC @ 120 mA; - 5 VDC @ 70mA

TECHNICIAN: K. SHERIDAN
OPTION NO:
SPECIFICATION:
FREQUENCY RANGE: 0.6 - 18 GHz

INSERTION LOSS (WORST CASE)	RETURN LOSS (WORST CASE)					
	INPUT dB	INPUT VSWR	OUTPUT ON dB	OUTPUT ON VSWR	OUTPUT OFF dB	OUTPUT OFF VSWR
J3-J1 2.78 dB	10.46 dB	1.85 : 1	9.63 dB	1.98 : 1	11.05 dB	1.77 : 1
J3-J2 3.26 dB	12.32 dB	1.63 : 1	10.92 dB	1.86 : 1	9.32 dB	2.04 : 1
	dB	1. : 1	dB	1. : 1	dB	1. : 1
	dB	1. : 1	dB	1. : 1	dB	1. : 1
	dB	1. : 1	dB	1. : 1	dB	1. : 1
	dB	1. : 1	dB	1. : 1	dB	1. : 1
	dB	1. : 1	dB	1. : 1	dB	1. : 1
	dB	1. : 1	dB	1. : 1	dB	1. : 1
	dB	1. : 1	dB	1. : 1	dB	1. : 1

ISOLATION	SWITCHING SPEED			
	DELAY ON	RISE TIME	DELAY OFF	FALL TIME
J3-J1 >50 dB	≤ 250 nS	nS	≤ 250 nS	nS
J3-J2 >50 dB	≤ 250 nS	nS	≤ 250 nS	nS
	nS	nS	nS	nS
	nS	nS	nS	nS
	nS	nS	nS	nS
	nS	nS	nS	nS
	nS	nS	nS	nS
	nS	nS	nS	nS
	nS	nS	nS	nS

NOTE: Any additional test data on back

TESTED ON: HP8757A/HP8350B

QA/QC APPROVAL: Q4 Donald Harmon DATED: 9/14/00

FINAL TEST DATA

AMC MODEL NO: MSNN-2DT-162W-04T, SERIAL NUMBER: 2MS008233

AMERI MICROWAVE CORPORATION
7311-G G E RD., FREDERICK MD. 21704
TEL: 301-662-4700 FAX: 301-662-4938

DATE: 11 SEPT 00

FINAL TEST DATA
ON
MICROWAVE SWITCH

CUSTOMER: RAYTHEON SYSTEMS
TECHNICIAN: K. SHERIDAN
JOB NO: 004080E-1
MODEL NO: MSNN-2DT-162W-04T
OPTION NO:
SERIAL NO: 2MS008233
SPECIFICATION:
CURRENT DRAW: + 5VDC @ 120 mA; - 5 VDC @ 70mA
FREQUENCY RANGE: 0.6 - 18 GHz

INSERTION LOSS (WORST CASE)	RETURN LOSS (WORST CASE)					
	INPUT dB	INPUT VSWR	OUTPUT ON dB	OUTPUT ON VSWR	OUTPUT OFF dB	OUTPUT OFF VSWR
J3-J1 2.60 dB	10.35 dB	1.87 : 1	12.93 dB	1.58 : 1	10.39 dB	1.86 : 1
J3-J2 2.60 dB	11.23 dB	1.75 : 1	10.91 dB	1.79 : 1	9.01 dB	2.09 : 1
	dB	1. : 1	dB	1. : 1	dB	1. : 1
	dB	1. : 1	dB	1. : 1	dB	1. : 1
	dB	1. : 1	dB	1. : 1	dB	1. : 1
	dB	1. : 1	dB	1. : 1	dB	1. : 1
	dB	1. : 1	dB	1. : 1	dB	1. : 1
	dB	1. : 1	dB	1. : 1	dB	1. : 1
	dB	1. : 1	dB	1. : 1	dB	1. : 1

ISOLATION	SWITCHING SPEED			
	DELAY ON	RISE TIME	DELAY OFF	FALL TIME
J3-J1 >50 dB	≤ 250 nS	nS	≤ 250 nS	nS
J3-J2 >50 dB	≤ 250 nS	nS	≤ 250 nS	nS
	nS	nS	nS	nS
	nS	nS	nS	nS
	nS	nS	nS	nS
	nS	nS	nS	nS
	nS	nS	nS	nS
	nS	nS	nS	nS
	nS	nS	nS	nS

NOTE: Any additional test data on back

TESTED ON: HP8757A/HP8350B

QA/QC APPROVAL: Q4 Donald Harmon DATED: 9/14/00

FINAL TEST DATA

AMC MODEL NO: MSNN-2DT-162W-04T, SERIAL NUMBER: 2MS008234

AMERI MICROWAVE CORPORATION
7311-G G E RD., FREDERICK MD. 21704
TEL: 301-662-4700 FAX: 301-662-4938

DATE: 11 SEPT 00

FINAL TEST DATA
ON
MICROWAVE SWITCH

CUSTOMER: RAYTHEON SYSTEMS
JOB NO: 004080E-1
MODEL NO: MSNN-2DT-162W-04T
SERIAL NO: 2MS008234
CURRENT DRAW: + 5VDC @ 120 mA; - 5 VDC @ 70mA

TECHNICIAN: K. SHERIDAN
OPTION NO:
SPECIFICATION:
FREQUENCY RANGE: 0.6 - 18 GHz

INSERTION LOSS (WORST CASE)	RETURN LOSS (WORST CASE)					
	INPUT dB	INPUT VSWR	OUTPUT ON dB	OUTPUT ON VSWR	OUTPUT OFF dB	OUTPUT OFF VSWR
J3-J1 3.06 dB	11.35 dB	1.74 : 1	10.55 dB	1.84 : 1	10.35 dB	1.87 : 1
J3-J2 3.3 dB	10.41 dB	1.86 : 1	8.95 dB	2.10 : 1	11.15 dB	1.76 : 1
	dB	1. : 1	dB	1. : 1	dB	1. : 1
	dB	1. : 1	dB	1. : 1	dB	1. : 1
	dB	1. : 1	dB	1. : 1	dB	1. : 1
	dB	1. : 1	dB	1. : 1	dB	1. : 1
	dB	1. : 1	dB	1. : 1	dB	1. : 1
	dB	1. : 1	dB	1. : 1	dB	1. : 1
	dB	1. : 1	dB	1. : 1	dB	1. : 1

ISOLATION	SWITCHING SPEED			
	DELAY ON	RISE TIME	DELAY OFF	FALL TIME
J3-J1 >50 dB	≤ 250 nS	nS	≤ 250 nS	nS
J3-J2 >50 dB	≤ 250 nS	nS	≤ 250 nS	nS
	nS	nS	nS	nS
	nS	nS	nS	nS
	nS	nS	nS	nS
	nS	nS	nS	nS
	nS	nS	nS	nS
	nS	nS	nS	nS
	nS	nS	nS	nS

NOTE: Any additional test data on back

TESTED ON: HP8757A/HP8350B

QA/QC APPROVAL: Q4 Donald Hasman DATED: 9/14/00

FINAL TEST DATA

AMC MODEL NO: MSNN-2DT-162W-04T, SERIAL NUMBER: 2MS008235

AMERI MICROWAVE CORPORATION
7311-G G E RD., FREDERICK MD. 21704
TEL: 301-662-4700 FAX: 301-662-4938

DATE: 11 SEPT 00

FINAL TEST DATA
ON
MICROWAVE SWITCH

CUSTOMER: RAYTHEON SYSTEMS
JOB NO: 004080E-1
MODEL NO: MSNN-2DT-162W-04T
SERIAL NO: 2MS008235
CURRENT DRAW: + 5VDC @ 120 mA; - 5 VDC @ 70mA

TECHNICIAN: K. SHERIDAN
OPTION NO:
SPECIFICATION:
FREQUENCY RANGE: 0.6 - 18 GHz

INSERTION LOSS (WORST CASE)	RETURN LOSS (WORST CASE)					
	INPUT dB	INPUT VSWR	OUTPUT ON dB	OUTPUT ON VSWR	OUTPUT OFF dB	OUTPUT OFF VSWR
J3-J1 2.98 dB	10.77 dB	1.85 : 1	10.53 dB	1.89 : 1	13.2 dB	1.56 : 1
J3-J2 2.94 dB	10.39 dB	1.86 : 1	10.09 dB	1.98 : 1	13.5 dB	1.53 : 1
	dB	1. : 1	dB	1. : 1	dB	1. : 1
	dB	1. : 1	dB	1. : 1	dB	1. : 1
	dB	1. : 1	dB	1. : 1	dB	1. : 1
	dB	1. : 1	dB	1. : 1	dB	1. : 1
	dB	1. : 1	dB	1. : 1	dB	1. : 1
	dB	1. : 1	dB	1. : 1	dB	1. : 1
	dB	1. : 1	dB	1. : 1	dB	1. : 1

ISOLATION	SWITCHING SPEED			
	DELAY ON	RISE TIME	DELAY OFF	FALL TIME
J3-J1 >50 dB	≤ 250 nS	nS	≤ 250 nS	nS
J3-J2 >50 dB	≤ 250 nS	nS	≤ 250 nS	nS
	nS	nS	nS	nS
	nS	nS	nS	nS
	nS	nS	nS	nS
	nS	nS	nS	nS
	nS	nS	nS	nS
	nS	nS	nS	nS
	nS	nS	nS	nS

NOTE: Any additional test data on back

TESTED ON: HP8757A/HP8350B

QA/QC APPROVAL: Q4 Donald Harmon DATED: 9/14/00